MT-46
TECHNICAL DATA

TRU-FLO
Valves & Automation

DIMENSIONS TO
ISO 5211 - DIN 3337
AND NAMUR VDI/VDE 3845

DIMENSIONS IN INCHES

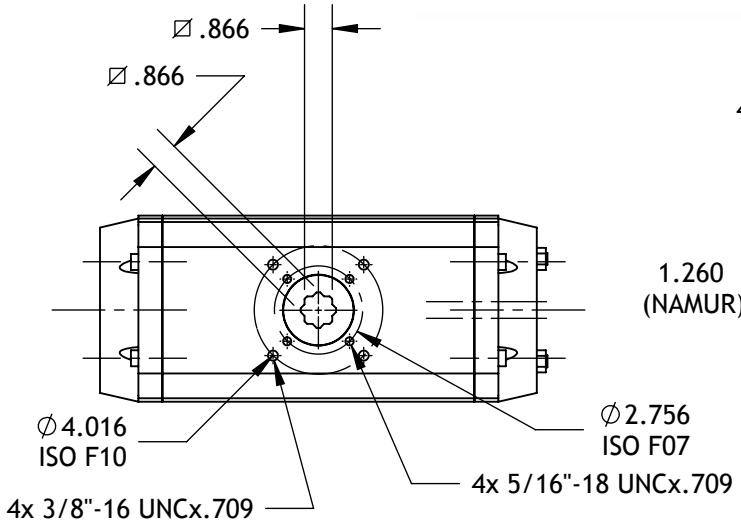

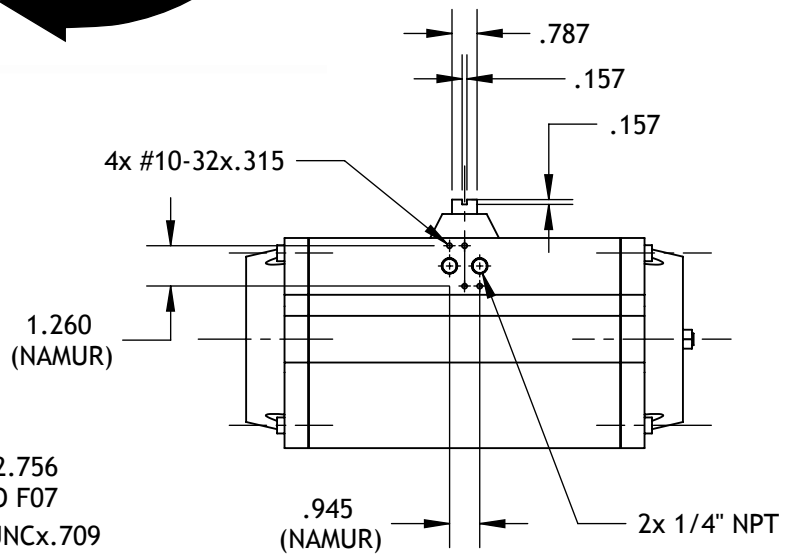

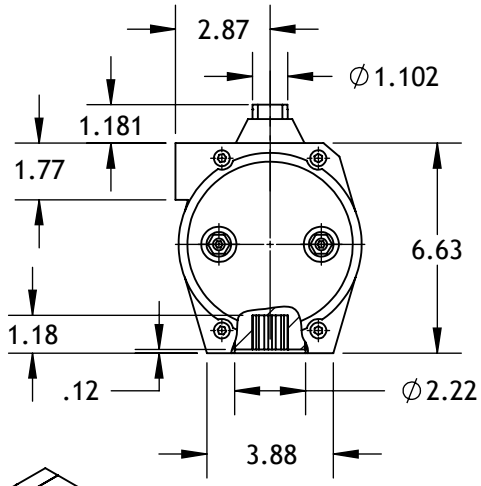

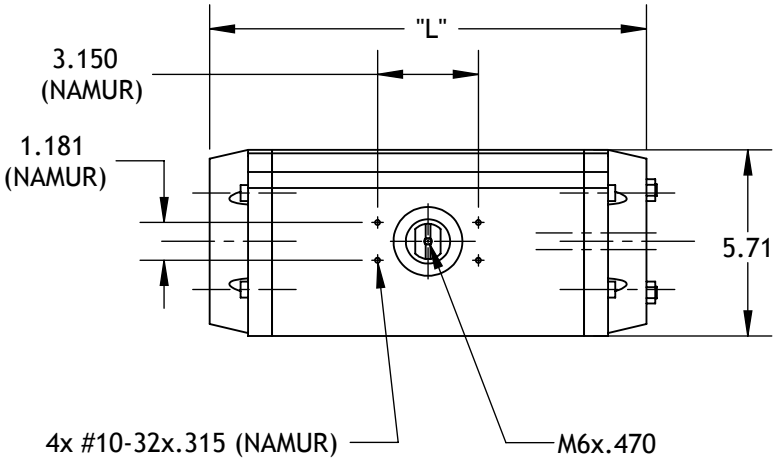

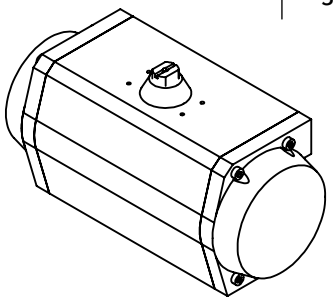

	90°	120°	135°	150°	180°
"L"	13.819	16.102	17.244	18.386	20.000

WEIGHT

	DOUBLE ACTING					SPRING RETURN 7+5 SPRING
STROKE	90°	120°	135°	150°	180°	90°
LB.	24.2	CALL	CALL	CALL	CALL	29.9

AIR CONSUMPTION (FULL CYCLE)

	DOUBLE ACTING					SPRING RETURN 7+5 SPRING
STROKE	90°	120°	135°	150°	180°	90°
CU.-IN.	275.0	343.8	378.1	412.5	462.5	115.6

QSM Incorporated

www.tru-flo.com 127 Village Ln. Easley, SC 864.605.0150